TROX® TECHNIK
The art of handling air

KFB

KFB

CENTRIFUGAL FANS FOR BUILDING VENTILATION AND AERATION

Especially developed for the tough operating conditions of a kitchen extract air fan. The impellers used with backward curved blades are insensitive to fatty deposits. They are also more efficient, which means the operating costs and the investment costs for the transformer control unit are much lower.

- 5 sizes
- From 200 to 400 mm
- Volume flow rate V max. approx. 7,200 m^3/h

Application

Application

- Centrifugal ventilation fan (supply and exhaust air), particularly for extracting air from kitchens
- Can be installed indoors and outdoors

Description

Accessories

- Wall bracket
- Connection sleeve
- Duct with self-powered shut-off damper
- Weather hood for motor
- 5-stage transformer (AP)
- 7-stage transformer (UP)
- Frequency inverter
- Local isolator, loose

Classification, standards and guidelines

- Satisfies VDI Guidelines 2078 and 2052

TECHNICAL INFORMATION

Abmessungen und Gewichte

Dimensions [mm]

①	A	B	C	D	F	G	H	I	J	K	L	Ø
225 E2 20	492	571	474	475	279	480	485	285	142	131	445	199
250 E2 20	592	690	561	548	329	540	567	344	166	156	505	249
280 E2 20	592	692	561	567	329	540	568	344	200	156	505	314
315 E2 20	700	790	663	669	382	590	611	405	220	181	555	354
400 E4 20	832	916	789	592	448	590	611	477	220	181	555	354
450 E4 20	832	916	789	637	448	590	611	477	220	181	555	354
500 E4 20	1016	1092	954	823	539	834	871	584	242	253	799	399
560 D4 10	884		930	820±10	487	730	766	500	217	215	695	399

① Nominal size

KFB

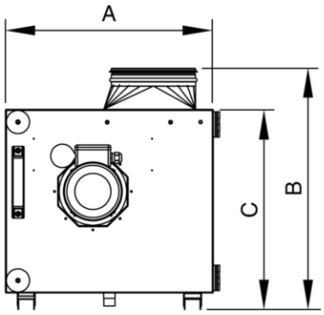

KFB

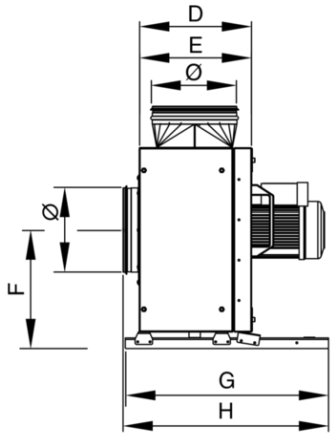

KFB

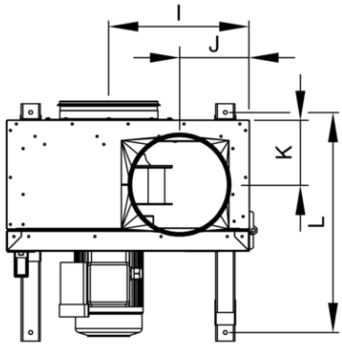

DETAILED DESIGN

HERE YOU'LL HAVE DIRECT ACCESS TO SELECT THE KFB VIA THE TROX X-FANS PRODUCT CONFIGURATOR

Following features are at your disposal::

- Based on your requirements of volume-flow, pressure and installation arrangement including desired accessories select the ideal fan…
- Appropriate selection according to required power, sound, nominal size, price and production period
- Options and accessories get assessed for plausibility
- All required documents (e.g. technical specification, tender specification, certificates, drawings etc.) of specific selected fan to be downloaded or send by E-Mail